International Journal of Recent Engineering Research and Development (IJRERD)
ISSN: 2455-8761
www.ijrerd.com || Volume 05 – Issue 12 || December 2020 || PP. 18-36

IoT Enabled Remote Equipment Control and Monitoring for Graphene plant

Dibyayan Patra[1], Chitresh Kundu[2], and Prabal Patra[2,] *
[1]*School of Electronics Engineering, Vellore Institute of Technology, Vellore, India*
[2]*Automation Division, Tata Steel, India*

Abstract: Things are becoming simpler and easier for us with the advancement of technology. Automatic devices are preferred over hand-held devices. This paper puts forth a system that enables users to control the box furnace (or any other industrial equipment) remotely using their cellular phones. It shows the solution architecture of the device to wirelessly control the furnace based on GSM networking and two microcontroller units. Initially, an authenticator signal is sent to the equipment from the user's cellular phone via Global System for Mobile Communication (GSM) network. This signal or code consists of the information about the function or action to be taken place for e.g. turning on/off the furnace. This information is sent to the GSM modem by the user's phone which in effect sends the microcontroller, the digital output signal. Then, the microcontroller, based on the received signal, controls the triggers for the corresponding action. Also, for IoT enabling the device, various parameters like set and current temperature, energy, time etc., are sent to the cloud for visualization and further analysis.
Keywords: GSM module; selector switch; PLC; Thing speak; box furnace.

Introduction

Because of the rapid growth in technology, things are becoming simpler for the users every day. Automation can be defined as the use of control systems and information technology (IT) to reduce the need for human labour in the manufacture of goods and services. Automation is a step beyond mechanization in the field of industrialization. Although mechanization provided equipment for human operators to assist them with physical labor requirements, automation also considerably reduced the need for human sensory and mental needs. Automation plays an ever-increasing role in the world economy and in everyday experience. Automatic systems are preferred to hand-held systems. In this paper, we have tried to show automatic control of a Box furnace of the steel plant. The types of home or industrial automation systems can be seen in (Figure 1).

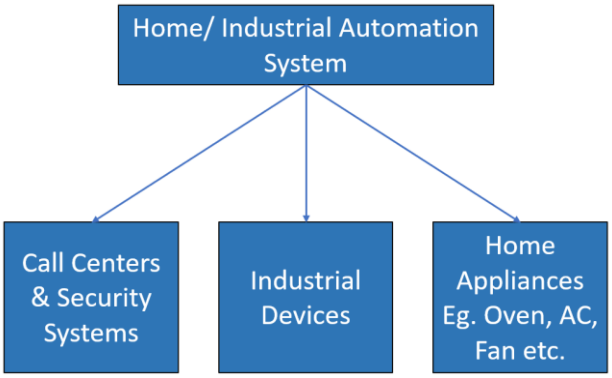

Figure 1. Types of Home/Industrial Automation

Objectives of the Paper

- ✓ Type S Thermocouple Input (any other type of thermocouple like K-, J-, N-, T-, R-, or E-type is also supported with minor modifications)
- ✓ Data capture facility (e.g. Time cycle, Temperature profile, Energy).
- ✓ Remote safety monitoring and data visualization via the cloud platform.
- ✓ Safety precaution for the Furnace (Smoke, Fire, Explosion).
- ✓ Minimize power and time wastage.

One of the trending technologies in Industrial automation is GSM. The presented GSM based Industrial Automation in this paper takes the existing function of the traditional on/off switch and adds significant automation benefits to control a system. The true power of the above technology-based Automation is that all the different Automation controls can co-exist and work in unison in operating the system to be controlled.

GSM-based Automation integrates a series of complex triggers to provide truly accurate control, if easily programmable.

The Box furnace automation system for transmitting SMS from sender to receiver is based on the GSM network technology. SMS sending and receiving are used for the omnipresent access to the furnace and for the monitoring of breaches at the plant. The system proposes two functionalities. The SMS interface (the first functionality) enables the user to control the furnace remotely whereas the security alert subsystem provides the remote security monitoring. The system is capable of instructing the users via SMS from a specific cell number to change the condition of the furnace according to the user's needs and requirements. The second aspect is the security alert which is done in a way that allows the device to automatically generate SMS on intrusion detection, thus alerting the user against security risk.

Motivation

Each and every person nowadays has a cell phone with him, and GSM network makes the people across the world communicate with each other. As technology nowadays is rising so dramatically, efforts are being made to make everything in the world is automated and wireless for man's comfort.

The concept is implemented at a very cost-effective price. The overall cost we incur in developing the IoT system is much lower and we have developed the GSM-based Industrial Automation that is more economical than just interfacing with those that are readily available on the market [1].

As a reason for drastic developments in the field of wireless communications these days, this technology's applications can be used in different sectors to make daily tasks comfortable and simple. One such application can be used to control the Box Furnace resulting in effective and efficient use of power that reduces the loss. This field has yet to be studied in large parts of the world. So, we'd like to take this opportunity to put forward a cost-effective wireless control system.

Literature Survey

Each and every person nowadays has a cell phone with him, and GSM network makes the people across the world communicate with each other. As technology nowadays is rising so dramatically, efforts are being made to make everything in the world is automated and wireless for man's comfort.

The literature includes many concepts of Industrial / Home automation. The paper [2] considers the problems with the implementation of home automation systems. Through various network technologies, possible solutions are further developed. Several problems surrounding home automation systems are addressed, such as lack of robustness, usability concerns, and acceptability among the elderly and disabled people. [3] presented a concept and implementation of monitoring systems based on SMS control. The paper has three modules which include a sensing unit to monitor complex applications. A microcontroller functions as a processing unit cum a communication module which uses a cell phone or GPRS modem through the RS-232 serial port. SMS is used for status reports such as power failure. The article [4] explores primary health-care management for the rural population. A proposal suggests the use of mobile web-technologies to provide the rural population with the PHC services. The program involves using SMS and cell phone technology to handle information, transaction exchange, and private communication. [5] proposed remote monitoring through mobile phone involving the use of voice commands. The voice commands are generated and sent in text SMS format to the control device, and the microcontroller then makes an SMS-based decision. [6] focuses on remotely controlling home appliances and providing protection while the user is away from the location. The SMS based system uses wireless technology to revamp quality of life. This system provides an ideal solution to the problems faced by homeowners in daily life. The system is wireless; hence it is more adaptable and cost-effective. The HACS software provides intrusion protection and also automates SMS use for different home appliances. The system uses GSM technology thereby providing the system with omnipresent security access and automatic equipment control. [7] described how home appliances can be operated and regulated with a cell phone, people can use this device to do stuff in their home from a distant location until they reach home. The user sends an SMS command from his / her mobile phone to a device connected to the appliance to control an appliance, after receiving the message the machine must send the command to a microcontroller for proper control of the appliance. [8] proposed the device which uses Atmel AT89S52 as a central microcontroller and allows remote control through SMS messages of various appliances.

The ideas of the above papers (Home Automation applications) can be incorporated in our problem 'Box furnace Automation' or in general Industrial Automation with further improvement. For example, in this paper In-house developed Embedded controller is used with more advanced features (Two MCU for multi-tasking, memory unit for storing data, Selector switch for RS232, and RS485 protocol, etc.). Furthermore, the information on the current status of the furnace and its related parameters is monitored via the open-source cloud platform ThingSpeak (by MATLAB) for visualization and analysis purposes.

Business Case

Graphene has been recognized by several new material industries as one of the advanced materials with the ability to multiply value across segments such as composites, fuel cells, heat transfer, electronics, and sensors. In this connection, a Graphene Development Cell (GDC) has been created in companies like Tata Steel, Jamshedpur to establish a business in terms of production units, the supply chain and markets. Setting up of GDC was the first step of Tata Steel towards evolving into a materials company. The unit has got facilities to produce two distinct products namely Graphene liquid and Graphene powder both in plant scale.
The Graphene powder is produced from a market-procured square Box Furnace. The furnace (Figure 2) has got the dimension of 1.5m X 1.5m X 1.5m (outer) and fitted with a thermocouple. With this an in-house developed control panel is attached to set the temperature, input current etc. In order to make the furnace operational it needs to be pre-heated which takes around 4-5 hours to reach the desired temperature of around 800-850 ºC. Once the temperature is reached to the desired temperature, then a container is filled with the raw material and kept inside the furnace for 3 minutes (processing time).

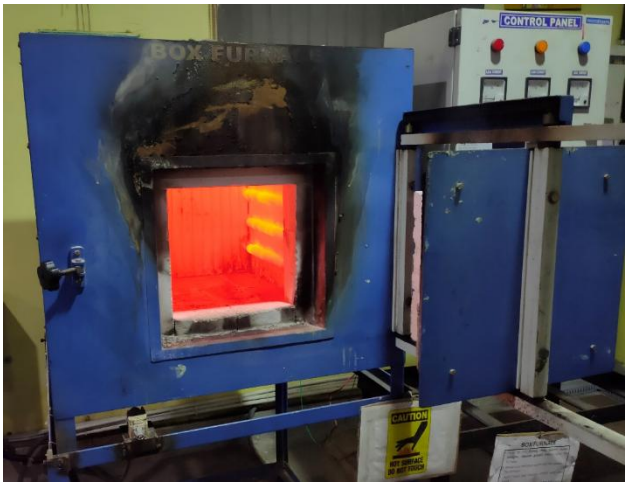

Figure 2. Box Furnace used in Industry.

The furnace is switched on at around 8:00 AM in the morning. It takes around 4 hours to reach the desired temperature. Thus, production starts effectively from noon. Around 0.4 Kgs are produced in an hour. Assuming that the furnace runs for 4 hours (till 5 PM), around 1.5 ~ 1.6 Kgs per day are produced. If the furnace is switched on at 6 o'clock in the morning remotely with a provision of temperature relayed back every hour with the safety interlocks, another 4 hours are available. Effectively 8 hours can be available for a good run that can be extended up to 10 hours. This will result in higher revenue and time saving. In this paper, the above-mentioned solution has been proposed, which uses cloud computing, concepts of IoT, embedded technology and GSM module technology.

Proposed Solution Architecture

The Box Furnace automation (Figure 3) is an IOT application incorporating functions of sensing, actuation and control in order to effectively operate the furnace remotely. It also makes decisions based on the available data in an adaptive manner and performs smart actions. The entire furnace functionality can now be controlled with SMSs using the GSM network. Apart from this, the system senses any emergency condition 24/7 and is always available to take necessary action. Finally, the information from the system is presented to the users using the cloud platform where continuous data logging takes place.

The functionality of this smart system can be classified into the following interfaces i.e.

- ✓ Hardware Design and development
- ✓ SMS interface
- ✓ Cloud interface
- ✓ Safety and exception handling Interface

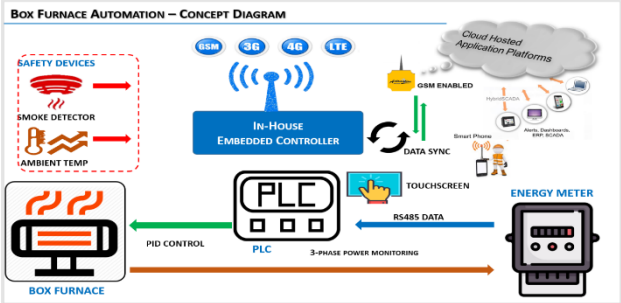

Figure 3. Box Furnace Automation Concept

Hardware Design and Development

The hardware prototype can be seen in (Figure 4). The labelling of the device can be seen in (Table 1).

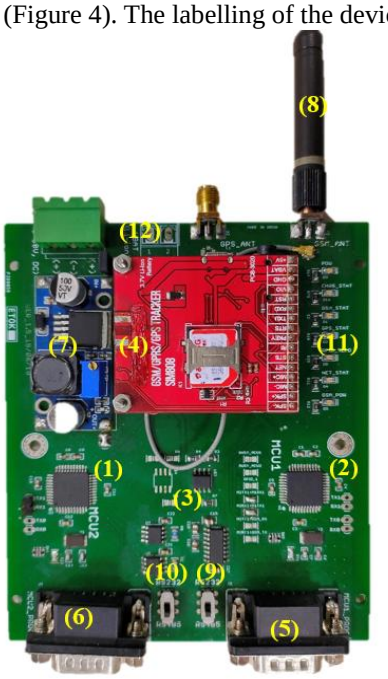

Figure 4. Hardware Prototype

Table 1. Labeling of Hardware Prototype

Appendix	Item
1	Microcontroller unit (MCU#1)
2	Microcontroller unit (MCU#2)
3	Memory unit
4	GSM module
5	PORT1
6	PORT2
7	Power supply unit
8	Antenna
9	Selector switch #1
10	Selector switch #2
11	Status LEDs
12	Battery

Microcontroller Unit

To meet all the functionalities, two microcontrollers has been used i.e. MCU\#1 and MCU\#2. Dual-microcontroller-based systems [9], [10] are quite well suited for multi-tasking scenario as there are two complete execution cores, each with an individual interface, rather than one. Because each microcontroller has its own cache, there are enough resources in the device to manage most compute-intensive tasks in parallel. If one microcontroller is busy with local data interface and control, at the same time another one can communicate with GSM network, so the system will be spanking, and there will not be any possibility of communication failure. (Figure 5) shows the block diagram of the hardware. There are two microcontroller units that are used on 'Universal serial to GSM controller'. One microcontroller is used to cloud communication and SMS interfacing (GSM module) and the other one is used for Local Data Acquisition (Sensor). The main reason behind the use of two microcontrollers is that if during the time of the cloud communication network was failed then Local data acquisition should not be hampered.

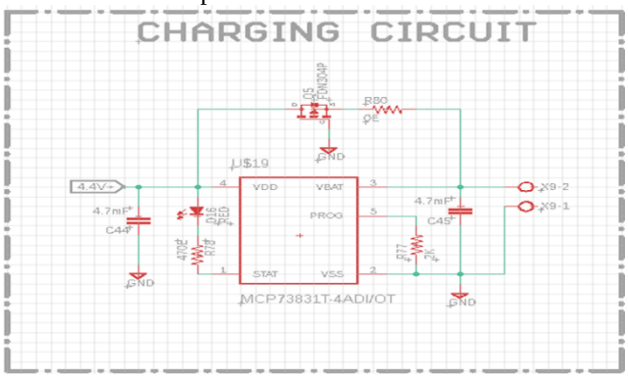

Figure 5. Block Diagram of Hardware.

Battery Backup Functionality

This smart system also has battery backup functionality. Hence, the system cannot be affected by an uninterrupted power supply. The charging and discharging circuit is shown in (Figure 6). If the external power supply is available, then the battery will be charged up to its full capacity and, then charging will stop. And this battery will immediately start to discharge if there is any issue (power cut) in the external power supply. Meanwhile, the system will not affect any more.

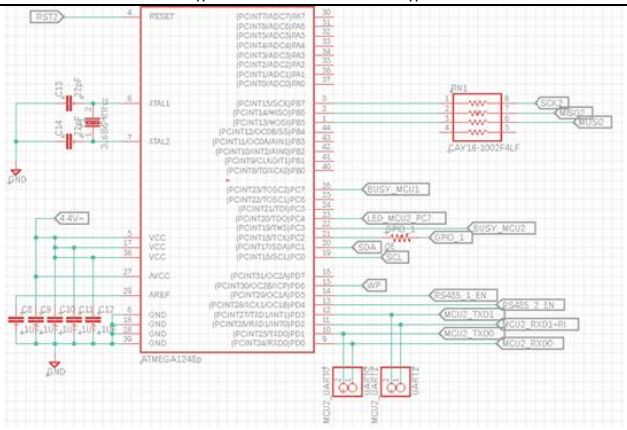

Figure 6. Schematic Diagram of Charging and Discharging Circuit

Microcontroller unit for GSM module

A GSM module or a GPRS module is a chip or circuit that is used for establishing communication between the computing unit and a GSM or GPRS system. It has all the functionalities of a mobile phone like making and receiving calls, SMS, MMS, etc. [11], [12]. This block (Figure 7) represents electrical interfacing between the GSM module and the Microcontroller unit. There has been used the external clock source and Regulated power supply to operate the system steadily. During the time of schematic design there has been number of digital I/O pin kept outside for Iron out the problem (Helpful for Firmware development). The Power supply of GSM module will control by the MCU\#1 unit and for searching the network status of GSM module, there has been made a connection between network status pin of GSM module with the input capture pin of microcontroller unit. To communicate with the other microcontroller unit (On Board) appropriate UART and I2C connection has been established. The GSM interfacing can be seen in (Figure 8).

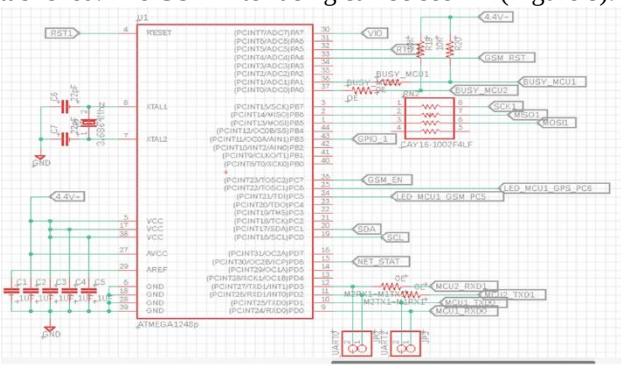

Figure 7 Schematic Diagram of Microcontroller unit for GSM module

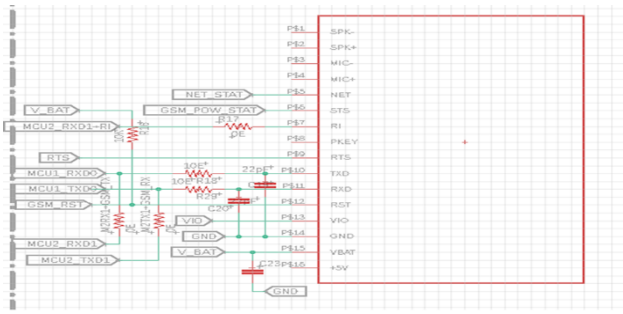

Figure 8. Schematic diagram for GSM Interfacing

Microcontroller unit for Local data acquisition

The above block (Figure 9) represents electrical interfacing between Sensor (That gives data in RS 485

and RS 232) and Microcontroller unit. Here, it is also used the suitable external clock source and regulated power supply to operate the system steadily. This microcontroller unit handle the Local Data Acquisition. Also, some digital I/O pin keep outside for debugging purpose.

Selector Switch

The selector switch has a very special functionality. It has two modes (Figure 10). In one mode, the system can communicate with the other system using RS 232 Protocol [13], and in other mode, the same system can communicate with the other system using RS 485 protocol [14].

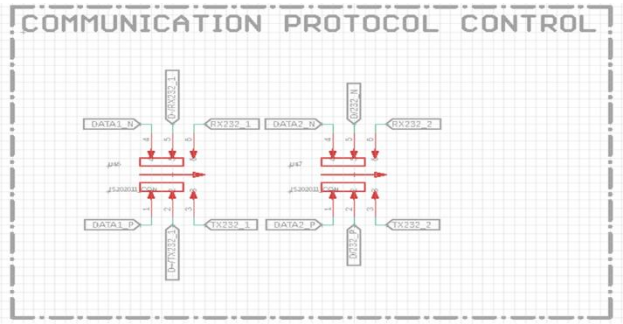

Figure 9. Schematic Diagram of Microcontroller Unit for Local dataacquisition

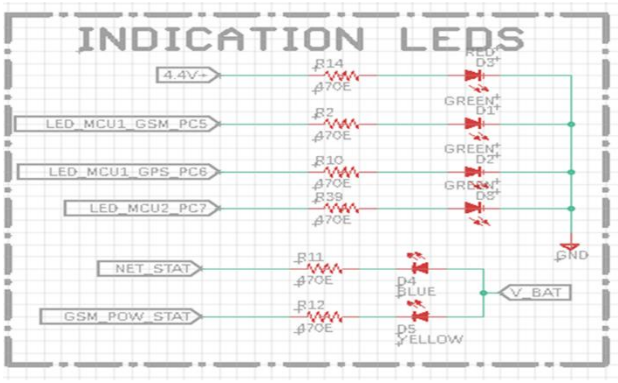

Figure 10. Schematic diagram of Selector Switch

Indication LED's

The design has been fitted with different status LEDs for indication purposes (Figure 11). Hence, the system will become more user friendly. During the time of schematic design, there has been used multiple numbers of indication LED's to observed the various status of the system.

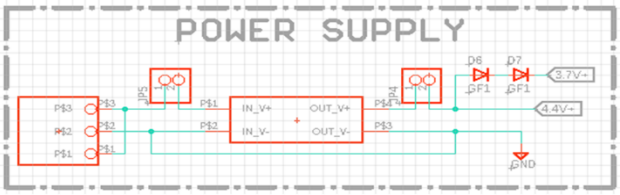

Figure 11. Schematic diagram of Indication LEDs'

Power Supply

Power Supply has been designed in such a way that it meets typical voltage and current requirements of all components on the board. During the time of schematic design there has been taken care of reverse polarity and over-voltage protection. Please refer to (Figure 12) for a detailed circuit diagram.

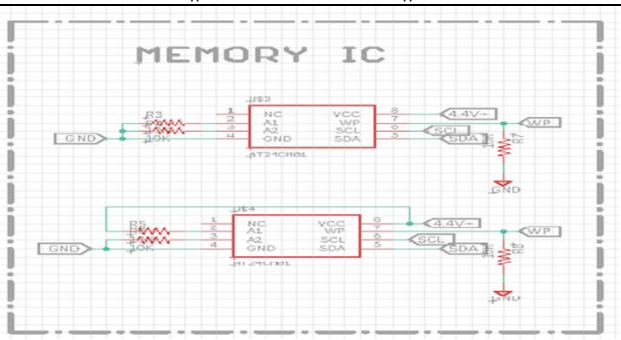

Figure 12. Schematic diagram of Power supply

Memory Units

There has been used one memory unit for storage and for retrieving important data for the future [15]. Here, both the memory unit can be accessed by both the microcontroller unit (Figure 13).

Figure 13. Schematic diagram of memory unit

SMS Interface

People of today in the era of modern science need knowledge in real time whenever they wish. And this can be achieved through the numerous developments in communication system technology. One of them is the launch of GSM cell phone, which is no longer an expensive device, and is readily available and affordable around the country and even the world. GSM technology is perhaps the most common because of the portability, cost-effectiveness and availability of the service. So, the idea of introducing SMS control [16] is an efficient real-time approach in any kind of appliance controlling as it is available to the masses. SMS encoding and decoding for sending and receiving in mobile communication is usually done by microcontroller through the GSM gateway. In that case, microcontroller plays an important role in controlling the devices or appliances and decides the operation based on the current situation. An illustration of the SMS interface can be seen in (Figure 14).

Figure 14. Illustration of SMS Interface

The SMS command set and device acknowledgments used are given in (Table 2).

Table 2.SMS Commands and Acknowledgements

Sn	SMS User Commands	SMS System Response/ACK	Remarks/Status of furnace
1.	*"BFON"*	"*Box Furnace has been TURNED ON in AUTO mode*"	Box Furnace will be on at Default temperature (800 ^{0}C). (Auto)
2.	*"BFONTXXX"*	*"Box Furnace has been TURNED ON in AUTO mode"*	Box Furnace will be on at XXX ^{0}C temperature. (Auto)
3.	*"BFOFF"*	*"Box Furnace has been TURNED OFF in AUTO mode"*	Box Furnace will be off. (Auto)
4.	*"SMSOFF"*	*"Outgoing SMS from Box Furnace has*	User will not get acknowledgement from the

		been DISABLED"	system. Note: if SMS feature is turn off system can also generate the below three messages 1. *ACCESS DENIED!!!Unauthorized mobile number* 2. *SORRY!!!now you can't access the system please try again in working hours (04:00-19:00)* 3. *INVALID SMS string Please resend the string using correct format* These three messages are unmasking during the whole time.
5.	*"SMSON"*	*"Outgoing SMS from Box Furnace has been ENABLED"*	User will get all acknowledgement from the system. Note: By Default, acknowledgement feature is turn on.
6.	*"BFSTATUS"*	*"Furnace Status:X* *Set Temp: XXX degC* *Current Temp: XXX degC* *Pre-Heat Time: XXX min* *Operating Time: XXX min* *Outgoing SMS: X* *Network Strength: XX* *Error Code: X"*	During the Valid time period the Users will get the acknowledgement with all System Parameters.
7.	*"VERSION"*	*"ADC/ICT/BoxFurnace: +9262290319/SoftWare:2.5/14-Jan-2020*	Acknowledge to the user according to current firmware version.
8.		*"Box Furnace has been TURNED ON in MANUAL mode"*	Box furnace on manually at a certain temperature given by users. (Manual)
9.		*"Box Furnace has been TURNED OFF in MANUAL mode"*	Box Furnace is off in Manual mode. (Manual)
10.		*"set temperature has been achieved"*	Temperature reached at set point.
11.		*"EMERGENCY!!! Smoke/Fire detected at Box Furnace"*	Fire has been detected near the Box Furnace.
12.		*"EMERGENCY!!! Stop button has been pressed"*	Emergency Stop button has been Pressed.
13.		*"SYSTEM ERROR!!! Pre-heat time is too high"*	Set temperature not achieved Box Furnace stop. Note: Maximum Preheated time is 300 minutes.
14.		*"SYSTEM ERROR!!! Operating time is too high"*	Operating time too high Box Furnace stop. Note: Maximum Operating time is 480 minutes.
15.		*"EMERGENCY!!!Ambient temperature near the Box Furnace is too high"*	Ambient temperature too high. Note: Maximum Ambient temperature is 60 degree Celsius
16.		*"GSM Link Fail"*	GSM Link fail. Note: Box Furnace will be resume condition
17.		*"Temperature not achieved for safety issue, Box Furnace Stop"*	PLC high temp safety limit.
18.		*"All error has been RESOLVED"*	After Resolving any error user will get acknowledgement.
19.		*"INVALID SMS string Please resend the string using correct format"*	Inform the users that system received an invalid SMS.
20.		"ACCESS DENIED!!!Unauthorized mobile number"	Inform the Unauthorized person he/she don't have authorization to access the system.
21.		*"SORRY!!!now you can't access the system please try again in working hours (04:00-19:00)"*	Inform the users, it's not the right time to access the system.
22.		*"SYSTEM ERROR!!!it's need to TURNED OFF manually"*	This condition can happen if box furnace is on in manual mode but user try to off the furnace in auto

			mode.
23.		*"SYSTEM ERROR!!!it's need to TURNED ON manually"*	This condition can happen if box furnace is in manual mode but user try to on the furnace in auto mode.

Cloud Interface

Cloud computing [17] is the most recent development in remote monitoring control. A cloud-based framework allows data to be accessed from one location, and available via a network and the Internet to local client devices. There has been a major change in the workload with cloud computing. The local devices do not need to run resource-intensive software applications anymore to access data. Additionally, cloud-connected devices don't need as much hardware to access data as devices with applications running locally. Using a standard web browser, a cloud-based program can access any web-enabled email service like Gmail, Hotmail, or Yahoo or utilities such as iCloud or Microsoft One Drive for online storage.

For the cloud communication, Thing speak Platform [18] has been used. This is a platform based on IOT, which gathers data from items (sensors). Things speak is an open source forum for users, and is very popular with experimenters on the internet of things. The primary purpose of this program is to gather and retrieve data from sensors whenever the user wishes. There are 8 fields available and those are used for visualization of the substantial system parameters. The Box furnace automation channel fields are described in (Table 3).

Table 3.ThingSpeak Fields

Field1	**Status**			
	0	1	2	3
	Manually off	Manually on	Off through SMS	On through SMS
Field2	Mobile number (Last Receiving SMS number)			
Field3	Set temperature of the furnace (0to 999 [^{0}C])			
Field4	Current temperature of the furnace (0 to 999 [^{0}C])			
Field5	Preheated Time. (0 to 300) [Minutes]			
Field6	Operating Time. (0 to 480) [Minutes]			
Field7	Total Energy consumption (0 to 99999kWh)			
Field8	Error Condition (0 to 9)			

The magnificence of the system is the cloud platform where all important system parameters like current box furnace status, system accessor mobile number, set temperature, current temperature, Pre-heat time, operating time, energy consumption and error values are captured.

Different error codes [19] have been generated for specifying different error conditions. These codes are specified in (Table 4).

Table 4.List of Error Codes

Error code	**Error condition**
0	*No Error*
1	*Fire Error*
2	*Smoke Error*

3	*Emergency Stop*
4	*Temp not achieved*
5	*Operating time too high*
6	*Ambient temp too high*
7	*GSM Link failed*
8	*Furnace door open*
9	*Temperature not achieved for safety purpose*

Safety and Exception Handling Interface

Safety Features

Accidents can happen anytime and anywhere. Hence, it is best to prepare for emergencies. So, during the design of the system, the system designer should take care for any exigency. There has been installed many sensors surrounding the Box Furnace (like Smoke detector, Fire detector, temperature sensor, Door switch) [20] that keeps the system aware for any emergencies. In the absence of users, if there is any emergency occurs, the smart system is capable enough to take necessary action and sends the data to the user.

Exception Handling

During the operation, certain exception cases may arise (like fire, smoke, explosion). So, during the design of the system, these abnormal behaviours were analysed and the system has been made capable to handle these errors in run time as mentioned in (Table 5).

Table 5.List of Exception Cases

Sn	Exception cases	Necessary Action
1.	During the inbox scan time more than one SMS received.	Only read the last SMS.
2.	If inbox storage is full.	There is not any Possibility of inbox storage full, because after receiving 15 SMS the inbox storage area will be deleted automatically.
3.	Network issue for long duration.	GSM module will be reset.
4.	Incoming call from any number at any instant.	System will not be affected by incoming call.
5.	If user give the set temperature 1125[^{0}C] through SMS.	System will be on at 112^{0}C. (system will always take higher 3 digit)
6.	If users on/off the furnace through SMS but not received SMS from system.	It may be the user's network problem.
7.	If SMS pack validity has been ended.	The inserted sim into the system is a post-paid sim. Please take care the recharge plan.
8.	If user on the furnace in auto mode and try to off manually.	Furnace will be off, and inform the users.
9.	If user on the furnace in manual mode and try to off the furnace through SMS.	When System is in manual mode it will not follow any instruction of Auto mode.
10.	If furnace is in manual mode but user try to on the furnace through SMS	When System is in manual mode it will not follow any instruction of Auto mode.
11.	If PID not working properly, means some time set temperature value below the set point and sometime above the set point. And this condition repeats again and again	System will get the information only for first time when it will cross the trigger temperature. After that it will be lock by system so that it cannot affected if the furnace temperature crosses the trigger temperature again and again.
12.	Noise on usart lines.	Till now no action taken.

13.	PLC communication failed.	Till now no action taken.
14.	Suppose users turned on the furnace (**through SMS**) at certain temperature and again change the set temperature value (**on through SMS**)	Users will get the SMS for both the cases. And set temperature value will be fixed according to last set temperature value.
15.	If any error occurs surrounding the Box furnace and after some time the error is resolve.	At the time of major error, the furnace will be Turned off immediately. And the system will remain off until the user acknowledges the error condition. But in case of minor error the system will not be affected. **Major error**: Smoke/ Fire detect, Operating time too high, Pre-heat time too high. **Minor error:** GSM link fail, Box furnace door open

Firmware Development

The flow chart of the entire process can be seen in (Figure 15).

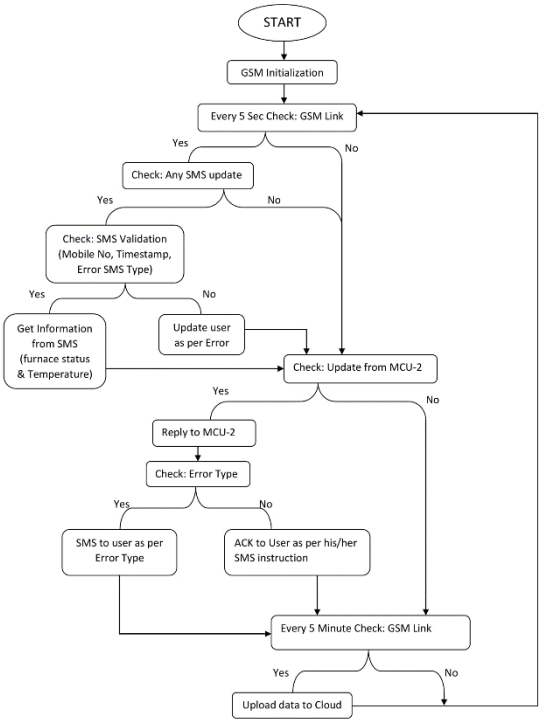

Figure 15. Flow Chart of the entire Process Flow

System Communication

The whole communication system according to designed architecture has been divided into three parts.

- ✓ PLC to Microcontroller (MCU#2) Communication.
- ✓ Microcontroller (MCU#2) to Microcontroller (MCU#1) Communication.
- ✓ Microcontroller (MCU\#1) to GSM Communication.

Here MCU\#2 is the master of the system. The Master will always keep the control and take necessary steps.

PLC to Controller Communication

An illustration can be seen in (Figure 16). At the beginning of the communication process, PLC [21] will collect different data from different sensors and send the query string to MCU\#2 at every 20 sec intervals. (After every 15 second interval, send the query string 5 times once in a second). *PLC will initiate the communication*.

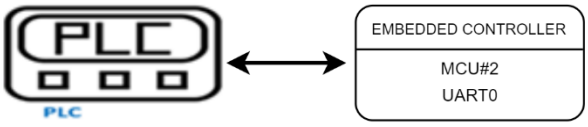

Figure 16. PLC to Controller Communication

Query String from PLC to MCU#2:
FSXECXTAXCTXXXATXXXRTXXXOTXXXSTXXXTEXXXXXCX\r\n (size 43 char)
String Description:

- ✓ FS >> Furnace Status (Table 6)

Table 6. FS

	Probable Occurrences(X)			
	0	1	2	3
F S	Manually off	Manually on	Off through SMS	On through SMS

- ✓ EC >> Type of Error Condition use (Table 4) for reference
- ✓ TA >> Temperature Achieved to Set Point (Table 7)

Table 7. TA

	Probable Occurrences(X)	
TA	0	1
	Set temperature not achieved	Set temperature achieved

- ✓ CT >> Current Temperature of Box Furnace (Table 8)

Table 8. CT

	Probable Occurrences (XXX)	
CT	000 [^{0}C]	999 [^{0}C]
	Minimum temperature of Box Furnace	Maximum temperature of Box Furnace

- ✓ RT >> Preheated Run Time of the Furnace (Time required to reach the set temperature) (Table 9)

Table 9. RT

	Probable Occurrences (XXX)	
R T	000 (minutes)	300 (minutes)
	Minimum Preheated time	Maximum Preheated time

- ✓ OT >> Operating Time of the Furnace (Time after reached the set temperature) (Table 10)

Table 10. OT

	Probable Occurrences (XXX)	
OT	000 (minutes)	480 (minutes)
	Minimum Operating Time	Maximum Operating time

- ✓ ST >> Set Temperature of the Furnace (The temperature given by user) (Table 11)

Table 11. ST

	Probable Occurrences (XXX)	
ST	000 [^{0}C]	999 [^{0}C]
	Minimum Set temperature	Maximum Set temperature

- ✓ TE >> Total Energy Consumption of the Furnace (Table 12) **Note:** After reached the maximum value the energy meter needs to be reset.

Table 12. TE

	Probable Occurrences (XXX)	
TE	00000 (kWh)	99999(kWh)
	Minimum energy	Maximum energy

- ✓ C >> Retry Count (Table 13). **Note:** If the PLC doesn't receive the controller's reply string, the retry count will increase from 0 to 9. After that the counter will reset automatically to zero. In case at any point in time, if the PLC receives the controller string then also counter will be reset to zero.

Table 13. C

	Probable Occurrences (X)	
C	0	9
	Minimum Retry count	Maximum Retry count

Acknowledgement string from MCU#2 to PLC:
FCXSTXXXGLXNSXXX\r\n (size 18 char)
String Description:

- ✓ FC >> Furnace Condition (Table 14)

Table 14. FC

	Probable Occurrences (X)	
FC	0	1
	Off through SMS	On through SMS

- ✓ ST >> Set Temperature of the Furnace (The temperature given by user) (Table 15)

Table 15. ST

	Probable Occurrences (XXX)	
ST	000 [^{0}C]	999 [^{0}C]
	Minimum Set temperature	Maximum Set temperature

- ✓ GL >> GSM Link (Table 16)

Table 16. GL

	Probable Occurrences (X)	
GL	0	1
	GSM Link OK	GSM Link failed

- ✓ NS >> Network Strength (Table 17)

Table 17. NS

	Probable Occurrences (XX)	
NS	00	31
	Network strength is very poor	Network strength is excellent

MCU#1 to MCU#2 Communication

It is the internal communication between two controllers.*MCU#2 will always initiate the communication.* An illustration can be seen in (Figure 17).

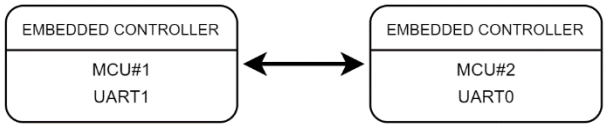

Figure 17. MCU#1 to MCU#2 Communication

Query String from MCU#1 to MCU#2:
FSXECXTAXSTXXXCTXXXRTXXXOTXXXTEXXXXX\r\n (size 36 char)

String Description:
FS, EC, TA, ST, CT, RT, OT, TE; Functions same as in section 3.2.
Acknowledgement String from MCU#1 to MCU#2:
FSXFTXXXGSXNSXXX\r\n (size 16 chars)

String Description:
- ✓ FT >> Furnace Temperature (Table 18)

Table 18. FT

	Probable Occurrences (XXX)	
FT	000 [^{0}C]	999 [^{0}C]
	Minimum temperature	Maximum temperature

- ✓ FS; GS (GSM Status) similar to GL; NS; Probable Occurrences similar as in section 3.2.

Test Cases and Results

For testing the accuracy of the developed design, the following activities have been performed as tabulated in (Table 19).

Table 19. Test Cases and Results

SL.no	Test Scenario	Expected Result	Actual Outcome	Pass /Fail	Remarks
1.	Sending the SMS using *"BFON"* Command **Note**: System is in **AUTO** mode	Box Furnace will be on at Default temperature (i.e.800 ^{0}C), And user will get "*Box Furnace has been TURNED ON in AUTO mode*" acknowledgement.	Box Furnace is on at 800 ^{0}C temperature And user also get "*Box Furnace has been TURNED ON in AUTO mode*" acknowledgement.	P	Box Furnace is Turned on 1 minute 45 seconds Later After sending the SMS
2.	Sending the SMS using *"BFONT850"* Command **Note**: System is in **AUTO** mode	Box Furnace will be on at 850 ^{0}C temperature And user will get "*Box Furnace has been TURNED ON in AUTO mode*" acknowledgement.	Box Furnace is on at 850 ^{0}C temperature. And user also get "*Box Furnace has been TURNED ON in AUTO mode*" acknowledgement.	P	Box Furnace is Turned on 2 minutes 05 seconds Later After sending the SMS
3.	Sending the SMS using *"BFOFF"* Command **Note**: System is in **AUTO** mode	Box Furnace will be Turned off And user will get *"Box Furnace has been TURNED OFF in AUTO mode"* acknowledgement.	Box Furnace is Turned off And user also get *"Box Furnace has been TURNED OFF in AUTO mode"* acknowledgement.	P	Box Furnace is Turned off 1 minute 30 seconds Later After sending the SMS
4.	Sending the SMS using *"BFSTATUS"*	The Users will get the acknowledgement with all System Parameters.	User get the below acknowledgement *"Furnace Status:*	P	User get the Acknowledgement 20 seconds later

	Command **Note**: System is in **AUTO** mode		*3* *Set Temp: 850 degC"* *Current Temp: 520 degC* *Pre-Heat Time: 105 min* *Operating Time: 000 min* *Outgoing SMS: 1* *Network Strength: 23* *Error Code: 0"*		after sending the SMS.
5.	Box Furnace is on in manual mode at 850 ^{0}C **Note**: System is in **MANUAL** mode	Box Furnace will be on at 850 ^{0}C temperature And user will get "*Box Furnace has been TURNED ON in Manual mode*" acknowledgement.	Box Furnace is turned on at 850 ^{0}C temperature And user get "*Box Furnace has been TURNED ON in Manual mode*" acknowledgement	P	Box Furnace is turned on immediately after Pressing the "Manual on" Button
6.	Box Furnace is Turned off in manual mode	Box Furnace will be Turned off And user will get *"Box Furnace has been TURNED OFF in MANUAL mode"* acknowledgement.	Box Furnace is turned off And user get *"Box Furnace has been TURNED OFF in MANUAL mode* "acknowledgement.	P	Box Furnace is turned off immediately after Pressing the "Manual Off" Button
7.	Sending the right SMS string By the Unauthorized Person.	Inform the Unauthorized person he/she don't have authorization to access the system.	Unauthorized Person get "ACCESS DENIED!!!Unauthorized mobile number" acknowledgement	P	Unauthorized Person get the Acknowledgement 20 seconds later after sending the SMS.
8	**Turned on** the furnace at 850 ^{0}C and check what will happen after crossing the trigger temperature.	User will get *"set temperature has been achieved"* acknowledgement	User get *"set temperature has been achieved"* acknowledgement	P	User get the immediate acknowledgement after crossing the set temperature. **(Only once)**
9.	PID loop tuning	Minimum Damping and achieving of set temperature	Criteria fulfilled	P	Loop tuning was successfully done
10.	Exception case handling	Any alarm should switch the furnace OFF	Furnace stopped successfully	P	Fire, smoke, over temperature alarms successfully handled.

We can see the data entries, done in real-time, of the created fields in ThingSpeak graphically in (Figures 18, 19, 20, 21).**Field 1** captures the current Box Furnace status; **Field 2** captures the mobile number which accessed the system; **Field 3** captures the set temperature value; **Field 4** captures current temperature value both in auto and manual mode and if Box Furnace is off the set temperature value will be zero; **Field 5** captures pre-heat time; **Field 6** capture operating time both auto and manual mode and at the time furnace is on the pre-heat time start to increase from zero and after reaching the set temperature the pre-heat time hold the data, and operating time start to increase; **Field 7** captures energy consumption; **Field 8** captures error code of Box furnace both in auto and manual mode.

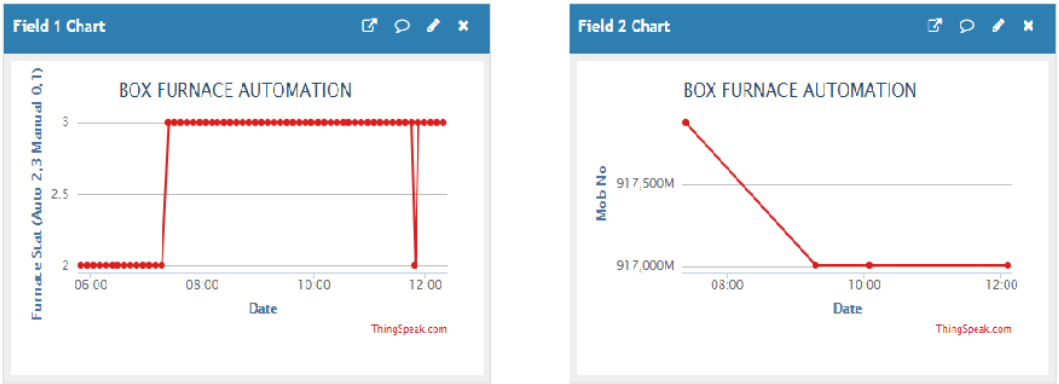

Figure 18. Fields 1 and 2.

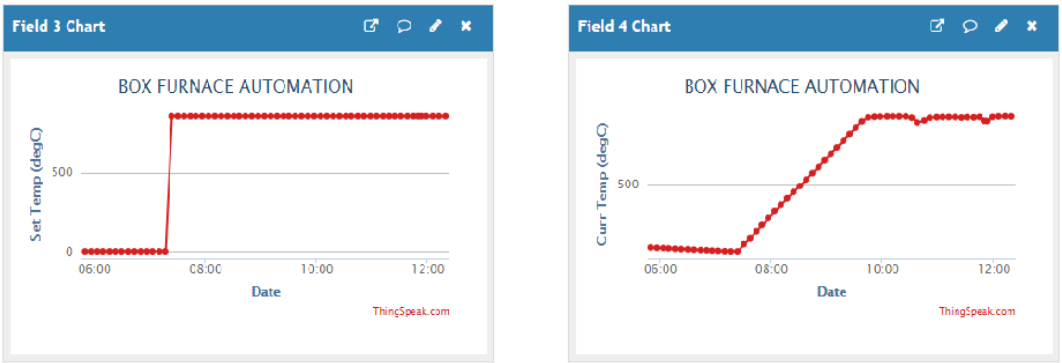

Figure 19. Fields 3 and 4

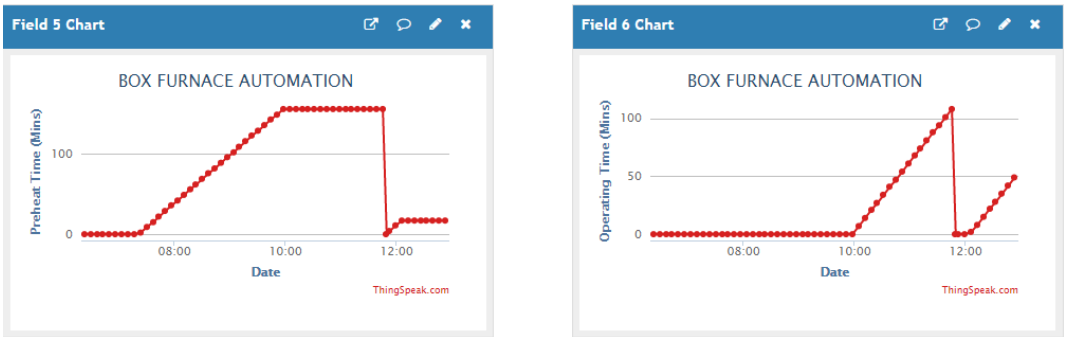

Figure 20. Fields 5 and 6

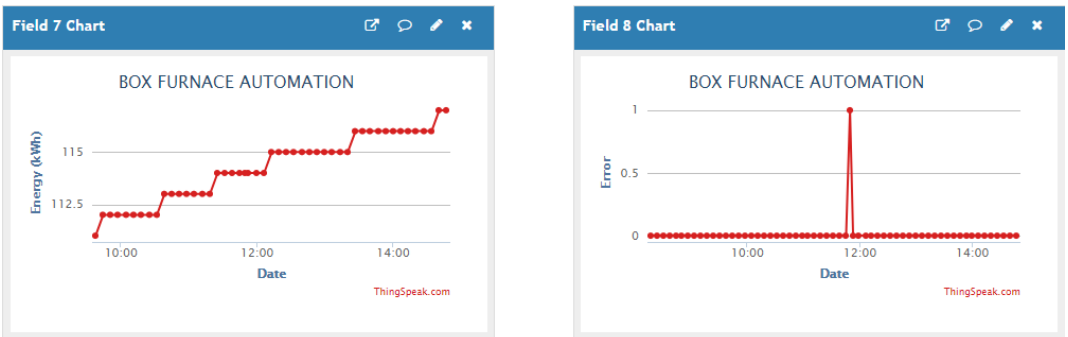

Figure 21. Fields 7 and 8

Conclusion

This article presents the development of a complete system for automating a Box furnace or any other similar kind of industrial equipment. This system is best categorized as a perfect Internet of Things based system and uses the concepts of cloud computing. It started with selecting the proper components required for building the IoT system. Then the paper gradually discusses how the data collection and remote switching takes place in real time. The entire communication process between PLC, both the MCUs and GSM module has also been discussed in detail.

This article is a perfect example of a fully-fledged IoT and automated device which is one of the most interesting trends and researched areas in these days. Based on the data results provided above, it is clearly evident that the designed system works without a fault. The above testings clearly justify that the developed design is reliable and provides a precise solution.

References

[1] Mazidi, Muhammad Ali, Janice Gillispie Mazidi, and Rolin D. McKinlay. The 8051 microcontroller and embedded systems: using Assembly and C. Vol. 626. Pearson/Prentice Hall, 2006.

[2] Delgado, A. R., Picking, R., & Grout, V. Remote-controlled home automation systems with different network technologies. Proceedings of the 6th International Network Conference (INC 2006), University of Plymouth, 11-14, pp. 357-366, July 2006

[3] Ciubotaru-Petrescu, B., Chiciudean, D., Cioarga, R., & Stanescu, D.,Wireless Solutions for Telemetry in Civil Equipment and Infrastructure Monitoring. 3rd Romanian-Hungarian Joint Symposium on Applied Computational Intelligence (SACI) May 25-26, 2006.

[4] Murthy, M. V. R., Mobile based primary health care system for rural India. W3C workshop on Role of Mobile Technologies in Fostering Social Development, Jun 2008

[5] Jawarkar, N. P., Ahmed, V., Ladhake, S. A. & Thakare, R. D., Micro-controller based Remote Monitoring using Mobile through Spoken Commands. Journal of Networks, 3(2), 58-63, 2008

[6] Malik, S. H. K., Aihab, K. and Erum, S., SMS Based Wireless Home Appliance Control System (HACS) for Automating Appliances and Security. Issues in Informing Science and Information Technology, 6, 887-894, 2009.

[7] Ahmad, B. I., Yakubu, F., Bagiwa, M. A and Abdullahi, U. I., Remote Home Management: An alternative for working at home while away. World of Computer Science and Information Technology Journal (WCSIT), 1, 4, 144-147, 2011.

[8] Mohamed Salman and Jayavrinda Vrindavanam, “Efficient Interactive Control System based on GSM”, International Journal of Latest Trends in Engineering and Technology (IJLTET), Vol. 3 No. 2, pp. 50=56, November 2013

[9] Y. Chen, Y. Lan and H. Ren, "The Research and Implement of a Dual-Controller System," 2012 Fourth International Conference on Computational and Information Sciences, Chongqing, 2012, pp. 1084-1087.

[10] M. Bin, "Dual-microcontroller based GPRS data transmission control system design," 2011 6th IEEE Joint International Information Technology and Artificial Intelligence Conference, Chongqing, 2011, pp. 101-104.

[11] SIM800 Series_AT Command Manual_V1.09, SIMCom.

[12] M. Yuchun, H. Yinghong, Z. Kun and L. Zhuang, "General Application Research on GSM Module," 2011 International Conference on Internet Computing and Information Services, Hong Kong, 2011, pp. 525-528.

[13] H. Xiaoru and G. Yudong, "Design and Implementation of the Universal RS232-GPIB Interface," 2007 8th International Conference on Electronic Measurement and Instruments, Xi'an, 2007, pp. 3-220-3-223.

[14] H. Jia and Z. Guo, "Research on the Technology of RS485 over Ethernet," 2010 International Conference on E-Product E-Service and E-Entertainment, Henan, 2010, pp. 1-3.

[15] Datasheet, AT24C128, Microchip.

[16] T. H. Nasution, M. A. Muchtar, I. Siregar, U. Andayani, E. Christian and E. P. Sinulingga, "Electrical appliances control prototype by using GSM module and Arduino," 2017 4th International Conference on Industrial Engineering and Applications (ICIEA), Nagoya, 2017, pp. 355-358.

[17] B. C. Kavitha and R. Vallikannu, "IoT Based Intelligent Industry Monitoring System," 2019 6th International Conference on Signal Processing and Integrated Networks (SPIN), Noida, India, 2019, pp. 63-65.

[18] A. Hammami, "Smart Environment Data Monitoring," 2019 International Conference on Computer and Information Sciences (ICCIS), Sakaka, Saudi Arabia, 2019, pp. 1-6.

[19] Savita, S. Shrivastava, A. Arora and V. Varshney, "Overvoltage and Undervoltage Protection of Load using GSM modem SMS Alert," 2018 2nd IEEE International Conference on Power Electronics, Intelligent Control and Energy Systems (ICPEICES), Delhi, India, 2018, pp. 249-252.

[20] K. Deve, G. Hancke and B. Silva, "Design of a smart fire detection system," IECON 2016 - 42nd Annual Conference of the IEEE Industrial Electronics Society, Florence, 2016, pp. 6205-6210.

[21] A. Alheraish, W. Alomar and M. Abu-Al-Ela, "Programmable Logic Controller System for Controlling and Monitoring Home Application Using Mobile Network," 2006 IEEE Instrumentation and Measurement Technology Conference Proceedings, Sorrento, 2006, pp. 469-47

Dibyayan Patra is pursuing B. Tech Degree from VIT University, Vellore in the field of Electronics and CommunicationEngineering with Specialization in Internet of Things and Sensors. His interest of research areas includes embedded system and programming, instrumentation, Internet of Things, sensor technology and communication systems. He has an experience of two internships at Instrumentation Department, TATA Steel and his areas of expertise include embedded systems, IOT platforms and wireless communications.

Chitresh Kundu received his M. Tech degree from IIT Kharagpur, India, in 2010.He is currently working as SeniorTechnologist (Instrumentation andControl, Automation Division, TATASteel. He is responsible for development ofvarious embedded system and RADARbased application for TATA Steel. His research interestsinclude the fields of antennas, RADARS, embeddedsystems, IOT platforms.

Dr. Prabal Patra has completed his B. Tech. in Instrumentation & Electronics from Jadavpur University, Calcutta. He has completed his PhD in RF Microwave Technologies from Jadavpur University. He iscurrently Head of the department ofInstrumentation & Control atAutomation Division of Tata Steel, which is a R&D department. His research areas includeControl systems, Machine Vision, Embedded systems, Laser, RF &Microwave Technology.