International Journal of Recent Engineering Research and Development (IJRERD)
ISSN: 2455-8761
www.ijrerd.com || Volume 02 – Issue 07 || July 2017 || PP. 142-146

# Fuel and alternative fuel for marine diesel engines

**Anh Tuan Hoang, Van Vang Le**
*Ho Chi Minh University of Transport*
*No.2, D3 Road, Binh Thanh District, Ho Chi Minh city, Vietnam*

**Abstract:** Fuel for engines is primarily a distillate, which is a complex mixture of different hydrocarbons. Based on the properties and structure of hydrogen carbon molecules are divided into three groups: straight hydrocarbon carbon (saturated and unsaturated); ring carbon hydrocarbons (naphthalene); Aromatic carbohydrates. The chemical composition of the fuel allows the self-ignition of the fuel to be compared to the self-igniting ability of the various fuels. The greater the content of hydrogen carbonate is, the less aromatic hydrocarbon is, the higher the self-ignition capacity. With marine diesel engines, two types of fuel are produced from petroleum: distillate fuels and heavy fuel. Low viscosity distillate so that it may not need to be heated before feeding into the diesel engine cylinder. Heavy fuel is the mixture of the remaining oil products when distilled directly from the oil. Based on the volume and quality of the composition, heavy fuel is classified into high viscosity and medium viscosity. Due to the high viscosity of the heavy fuel, drying equipment is required in the fuel system.
**Keywords:** fuel. alternative fuel, marine diesel engine, emission, pollution.

## 1. Introduction

With fossil fuels becoming more and more depleted nowadays, fuel prices are soaring, research cooperation finds new sources of energy, renewable energy replacing traditional energy sources as present-day solutions. Drastic measures, with great significance to the issue of energy security in the world in general and Vietnam in particular. Understanding the general trend of the world and implementing the direction of the Government, Vietnam has actively deployed research, production and testing of new fuels. As a result, in 2010 Vietnam used part of ethanol fuel E5 and biodiesel B5 in the road sector.

According to energy experts, the rich and endless source of biofuels, humans are no longer obsessed with fossil fuels. According to the government's energy program that has signed a decision approving the "Biofuels Development Scheme up to 2015 with a vision to 2025," the urgency of the new fuel has more prominent advantages over Traditional fuels (oil, coal, ice ..). Environmental friendliness, low greenhouse gas content, environmental pollution are the advantages of biofuels, new fuel.

In the future, when traditional fuels are exhausted, biofuels are the alternative candidate. The more developed the world is, the greater the demand for fuel, while the natural resources are not unlimited, including solar energy.

Therefore, the search for a new fuel source is more plentiful, more sustainable, less polluting, greenhouse effect and environmentally friendly is also the task, also the opportunity to master natural resources. New material. Under the direction of the Government of the Biofuels Program, the goal of developing biofuels, a new form of renewable energy to replace a part of traditional fossil fuels, contributes to security Energy and environmental protection are strategic.

In the maritime industry, most of the ships operating today use diesel engines as a propulsion device for rotary propellers, hybrid generators or other equipment. This is a huge consumer of fossil fuels and has a high level of emissions into the environment that we are all very interested.

One of the most renewable and eco-friendly alternative fuels currently available is biofuels. This type of fuel has been researched, and used extensively for internal combustion engines for the vehicles. In the maritime field, this type of fuel is mainly used in combination with fossil fuels for new generation engines or conversions. So the use is limited and difficult. Subject: "Research on the use of bio-oils / biodiesel fuel mixture on small marine diesel engines", is a very feasible and highly practical solution, the topic has practical significance. This is in line with Vietnam's development orientation of biofuels. Contribute to solving the problem of limiting the use of traditional fuel polluting the environment, limiting the exploitation of natural minerals. Promote the use of environmentally friendly new types of fuel on small marine diesel engines today.

The main solution is to accelerate the research and development of applications into practical exploitation and encourage the use of biofuels. Strengthen the building of material foundations, train human resources, improve the system of policies, legal documents and intensify international cooperation on the development of biofuels, raising public awareness on the development of biofuels.

## 2. Marine diesel engines

Marine diesel engines are internal combustion engines, the combustion of diesel fuel occurs in the combustion chamber when the piston approaches the upper dead zone in the compression phase, fuel is injected, blended, evaporated and burnt under. Effect of temperature and high pressure on compressed air is considered. the diesel engine was invented by a German engineer, Rudolf Diesel in 1892. The engine's working cycle is also called the diesel cycle.

In the world, with the great development of the manufacturing industries, the use of diesel engines in agriculture, industry and transportation is very extensive, with the capacity and Large scale. Not only have industrialized countries applied early, but they have always improved to meet the demands of development in the world today. From rudimentary engines, large, bulky structures over time have become compact, beautiful engines of form, design, modernity in automation and control systems. Because of the advantages of diesel engines over gasoline engines such as higher engine performance, cheaper fuel, use of fuel mixes and quality, it is not too rigorous. Widely used in many industries.

In the industrialization and modernization of the day, the use of small diesel engines has played an important role in contributing to the development of the national economy in areas such as manufacturing. In agriculture, transportation by road, waterway, small diesel engines are operated efficiently to meet the requirements in the fields of exploitation and production, besides the manufacture of structural engine improvements to improve capacity, economic norms, There are other research projects such as producing new fuel, biofuel replacing a traditional and friendly fuel, without environmental pollution, greenhouse effect. These studies have been studied and applied by many countries, organizations and scientists in the world with the aim of being environmentally friendly and reducing harmful emissions to the environment, etc…

In Vietnam today, diesel engines have been used extensively in agriculture, industry, transportation and waterways for a long time. Vietnam is a war-torn country, and we are now a developing country with a backward, agricultural, industrial, transportation backwardness. Development lags far behind other countries in the region and in the world in all areas, so that the application of technology and industrial products to the world is always The State paid much attention to investment, especially for investors who created superior products. The application of modern machines to production was prioritized for development. In that small diesel engine is focused development and practical application in the manufacturing industry, as for some cars of Hyundai, Mercedes etc. According to the general development trend above As in the world as in Vietnam, in the next few years, the use of new generation of small-sized diesel engines is being strongly developed by excellence such as fuel economy, smooth operation and no pollution of the environment. bare.

In the field of agriculture, forestry and fisheries, small diesel engines are used as a source of power for soil preparation, water pumping, animal feed suppression, milling machines etc. Small diesel engines are also made into tractor mixes, shore-based generators for companies, plant enterprises, etc. Most small diesel engines operate at stable speeds and are close to the design revolutions, which are suitable for industries and fields, production and exploitation on the shore. The design of the engine is simple, easy to use, repairs, extracts and maintains maintenance.

In the field of marine diesel engines are widely used on all surface ships and even submarines in the field of military. It is the merits of diesel engines compared to gasoline engines that shipbuilders, diesel generators, investors and operators have put their trust in diesel engines. Diesel engines are installed under the ship as a driving force to push ships, hybrid generators, hybrid pumps ... Depending on the purpose of use, the diesel engine installed under the vessel has many different power types such as dynamics. High-speed slow-motion engines, high-speed engines, mid-speed motors and small-capacity engines. Along with that, the fuel used for the engine is as abundant as light fuel (DO), heavy fuel (FO) and fuels blend between fuel (DO) and vegetable oils.

Today, all the advances in science and technology, manufacturing and manufacturing of diesel engines are eager to create new generations of engines that meet the needs and purposes of human use, meeting the conditions of use. Waterfall and especially meet the problem of emissions do not pollute the environment, the greenhouse effect. Including engines that use new fuels, traditional biofuels replace traditional fuels is an urgent requirement. Initial introduction of new fuels and biofuels into diesel engines is a small diesel engine on board.

Diesel-powered marine engines often assume the function of a propeller-driven main engine or alternator, or hybrid propulsion. In addition to the general structural features, marine diesel engines have many distinct characteristics compared to fixed-mounted diesel engines or fitted on road transport vehicles. This comes from the special requirements on the features, working conditions, operating and installation conditions as well as current regulations and regulations as defined by the IMO. Actually, the marine diesel engines are classified in terms of revolutions and capacities into three types (Table 1)

Table 1. Marine diesel engine classification

| Technical parameters | Diesel engine type | | |
|---|---|---|---|
| | **High speed - 4 stroke** | **Medium speed - 4 stoke** | **Low speed - 2 stroke** |
| Average velocity of piston [m/s] | > 8,5 | 6,5 ÷ 8,5 | ≤ 6,5 |
| Average velocity of crank shaft [rpm] | 960 ÷ 3000 | 400 ÷ 1000 | 50 ÷ 250 |
| Power [kW] | 5000 | 500 ÷ 30.000 | 1.500÷100.000 |

Diesel engines are used as main propulsion motors, hybrid generators, hybrid generators, hybrid auxiliary equipment, capable of stable, reliable operation for a long time, continuously, in a constantly changing environment in physical conditions (temperature, humidity, etc.) and chemical conditions (salinity in air). With the requirements of safety, reliability and economy were presented in the International Maritime Safety Convention (IMO) Convention on Marine Life Safety - SOLAS 74. The marine vessels normally designed to work with a rotation of 50 rpm (two-stroke engine capacity) to 1500 rpm (four-cycle hybrid generator or hybrid propeller in Small ships), in addition to the engines mounted on military vessels, the rotation is up to 2500 rpm, while higher speed engines as classified in (Table 1) can be fitted or placed on small ships for the purpose of tourism or in military vessels and other service vessels. During design and manufacture, the working cycle of the engine determines the time the fuel is fed to the engine and accordingly the appropriate fuel. To see the fuel picture used for the engine shown above, take the rotational value of some typical engines to calculate and show how long the fuel is fed to the engine depends on their speed of work.

From the above figures show that:

- High-speed diesel engine (from 1500-3000 v / p), fuel injection time is very short and only occurs within 0.0016 to 0.0033 pages. For this type of engine, the fuel used is MGO (marine gas oil) light diesel with high quality and relatively expensive price. Heavy fuel HFO (heavy fuel oil) will adversely affect the operation of the engine, as heavy HFO oil needs longer evaporation time to mix with the air that forms. Complete combustion mixture.

- For medium and low speed diesel engines (from 600 to 94 v / p), fuel delivery times will be longer than high speed motors and occur from 0.0083 to 0.044 pages. With this kind of characteristics, diesel engines can use HFO with lower quality and price.

With the same specifications as conventional diesel engines, they are quite easy to use in the use of different fuels, from distillate fuel to HFO. In fact, in order to increase economic efficiency in the operation of medium speed and low speed diesel engines on board, HFO fuel is used mainly. Low viscosity distillate fuels are commonly used in unstable operating modes, transition modes to ensure engine performance parameters. These fuels have their own characteristics, meeting the requirements of the engine in terms of structure, operation and operation of engines such as: density, heat value, viscosity, freezing temperature, flame temperature , Ash value, ash content, sulfur content, water content and so on.

As a consequence, ocean-going vessels use two-speed engines (50-210 v / p) as main engines. At the same time, auxiliary engines use four-stroke diesel engines with or without turbochargers. With specialized vessels such as tugs, ferry boats, ocean-going vessels, high-speed and high-speed diesel engines (can> 1500v / p) are widely used as main engines. At present, almost 100% of river ships and marine vessels are equipped with diesel power stations in Vietnam. The number of vessels also accounts for 95-97% of the total installed diesel power equipment.

## 3. Fuel and alternative fuel

Generally, the fuel used for the diesel engine will be determined by the motor's specific technical characteristics as described in section 1.2.1. Therefore, the International Organization for Standardization (ISO) has set standards for fuels suitable for diesel engines, including marine diesel engines. The mandatory standards for diesel engine fuels are based on the properties of fuels such as density, calorific value, solubility, sulfur content, etc. This is also the basis for assessing the suitability, reliability and safety of a fuel when used as a substitute for marine diesel engines.

According to US standards, diesel is divided into six different grades numbered from 1 to 6 depending on boiling point, chemical composition, purpose of use and viscosity (the higher the viscosity, the higher the index). The viscosity of diesel No. 6 is the highest and the number 1 is the lowest. Diesel grades numbered 1 to 3 are usually distilled diesel. Diesel No.1 is kerosene, also called steam oil because it burns out completely when it is heated. Diesel No.2 (also called DO) is a diesel fuel used primarily for road diesel and diesel engines with the properties shown in Table 2. Diesel No.6 is the rest of the crude oil after all the components such as gasoline, kerosene and fuel oil components volatilize, so it's also called sludge or heavy oil. Diesel No.4 is a

blend of Diesel No.2 and Diesel No. 6, Diesel No.5 is also a blend of the two, with a higher ratio of Diesel No.6 in the mixture and up to 75% weigh.

Table 2. Properties of diesel oil No.2

| Properties | Unit | Value | Standard |
|---|---|---|---|
| Sulfur content | % mas | 0.36 | EETD 86 |
| Combustion temperature | $^oC$ | 91 | EETD 84 |
| Density at 15$^oC$ | $Kg/m^3$ | 846.4 | EETD 84 |
| Pour point | $^oC$ | -27 | Mackay 82 b |
| Kinematic viscosity 20$^oC$ | cSt | 4 | Mackay 82 b |

Although marine diesel engines work with a wide variety of fuels, when fuel is employed on diesel ships, it is necessary to meet rigorous requirements, such as fire and explosion requirements. Ensure safety on board.

The flash point of the fuel used for the main diesel engine on the ship shall not be less than 60$^oC$.

Fuel temperature must be lower than flash point within 10$^oC$. Fuel needs high stability, ensuring that the heavy components in the fuel are not separated and settled to the bottom of the tank. Because ships are generally long-term operations on the high seas, they must store a large amount of fuel (thousands of tons of oil) and work in ever-changing weather and climate.

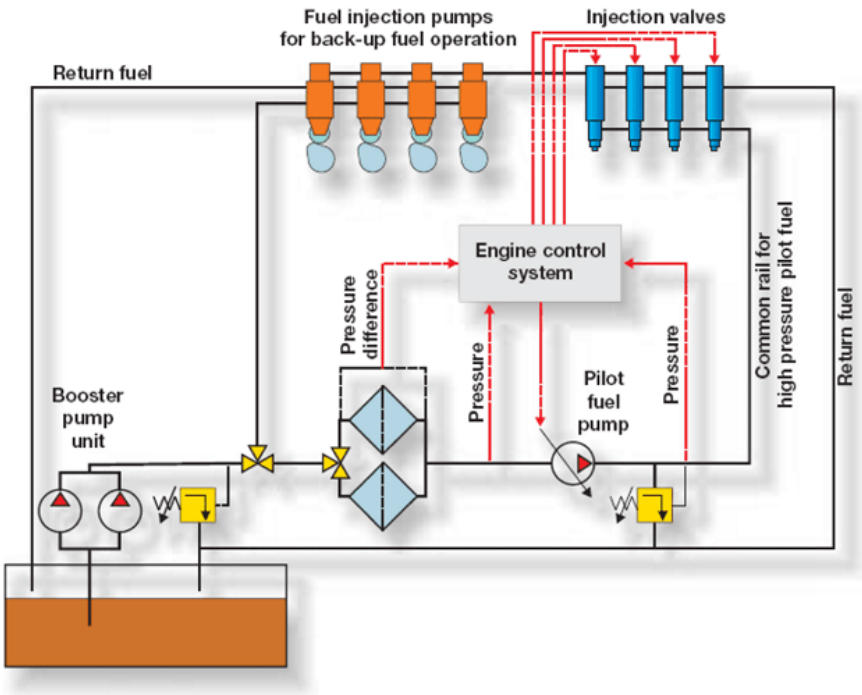


Figure 1. Fuel system for marine diesel engine

Because marine diesel engines are usually low-speed and mid-speed engines, the use of relatively inexpensive fuels with mechanical components and sulfur is relatively high. This is a major source of environmental pollution of water transport vehicles. Another problem with on-board fuel related to the mode of operation of marine diesel engines is that it negatively affects the environment. In the exhaust gas of diesel engines are often many different environmental toxins, including $NO_x$; $CO_x$ and $SO_2$ are the major constituents with content over 80% by volume. This amount of toxic waste is increased when the engine is operating in unstable conditions. Thus, with the large number of means of water transport as present, it can be seen that pollution sources from the ship contribute a considerable part in the pollution of the common living environment of the whole world. In recent years, the International Maritime Organization (IMO) has attempted to put in place many energy efficiency regulations on board, thus controlling the amount of greenhouse gases generated. Technical standards and operators as follows: Energy Efficiency Design Index (EEDI), Energy Efficiency Operation Index (EEOI), Energy Efficiency Management System (SEEMP), Energy Efficiency Design Index (EEDI) can be considered as one of the technical standards to reduce the CO2 generated by the ship. IMO's

Marine Environmental Protection Committee (MEPC) has been continuously improving this set of rules to apply to the fleets since 1997. In July 2011, mandatory regulations for EEDI, SEEMP Was adopted and the SEEMP was formally incorporated into Annex VI of the International Convention for the Prevention of Pollution from Ships (MARPOL73/78) applicable to all existing and newly built vessels 400 or more. Subsequently, the revised Annex VI of MARPOL 73/78 entered into force on January 1, 2013 with the addition of a Chapter 4 "Ship Energy Efficiency Regulation".

Table 3. $NO_x$ emission standard

| **Standard** | **NOx emission [g/kWh]** | | |
|---|---|---|---|
| | **n<130[rpm]** | **130 □ n □ 2000[rpm]** | **n □2000[rpm]** |
| With placed engine before 1/1/2000 | 17.0 | $45n^{(-0.2)}$ | 9.8 |
| With placed engine after 1/1/2000 and before1/1/2011 | 17.0 | $45n^{(-0.2)}$ | 9.8 |
| With placed engine after 1/1/2011 | 14.4 | $44n^{(-0.2)}$ | 7.7 |
| With placed engine after 1/1/2016 | 3.4 | $9n^{(-0.2)}$ | 2.0 |

## 4. Conclusion

The stated issues adversely affect the efficiency of vessel operations, especially as fuel prices and associated transport costs continue to increase while freight rates decrease. Promote the application of new technologies, using renewable energy to replace traditional fuels in transportation. " To realize this, it is necessary to focus on the application of new technologies, renewable energy in transportation such as: Applying new technical innovations and technologies in transportation To save energy, reduce emissions of environmental pollutants; To implement the application of renewable energy, traditional energy alternative fuels (CNG, LPG, LNG, biofuels, electricity and energy). Other potential) for vehicles, transport equipment to improve energy efficiency.

## References

[1] Eiichi Muraoka, “Recent Movement of International Rules Regarding air Pollution Prevention from Ships in the International Maritime Organization (IMO)”, National Maritime Research Institute 8, (2) 183 (2008) in Japanese.

[2] Energy-Efficiency-Related Treaties (EEDI and SEEMP)”, Nippon Kaiji Kyokai website in Japanese.

[3] Kazuyoshi Harumi, “Tightening of Exhaust Gas Emission Regulations and How to Respond”, SEA JAPAN seminar documents, April 10, 2014 in Japanese.

[4] Fumio Iwafuchi, “Historical Development of Gas Engine for Industry and Marine Use,” Center of the History of Japanese Industrial Technology, National Museum of Nature and Science in Japanese.

[5] Takashi Watanabe, Shigeyuki Shibata, “Introduction of LNG Carrier Equipped with ME-GI Engine”, Journal of JIME, 49, (1) 13 (2014) in Japanese.

[6] Takayuki Hirose, et al., “Development of 2-Stroke Gas Engine with Low Pressure Gas Injection”, Journal of JIME, 49, (1) 7 (2014) in Japanese.

[7] Masaki Otsu, “Introduction to ME-GI LNG-Fueled 2-Stroke Gas Engine”, 2014 environmental seminar documents, Nippon Kaiji Kyokai in Japanese.