International Journal of Recent Engineering Research and Development (IJRERD)
Volume No. 01 – Issue No. 08, ISSN: 2455-8761
www.ijrerd.com, PP. 09-15

Effect of Air-Dam on Low End Passenger Cars

Abhinav Damle[1], Amitkumar Magdum[1], Isha Tikekar[1]
[1]DepartmentofAutomotiveEngineering,SchoolofMechanicalEngineering,VITUniversity,Vellore, TamilNadu,India,632014

Abstract: Aerodynamics of vehicle plays a vital role to determine the fuel efficiency of automobile, stability of vehicle at higher speed, better, higher top speeds, reduced the requirement of large power rating of engine etc. These can be achieved by reducing the drag and lift acting on vehicle. This paper aims at determining the effect of use of air-dam for passenger car. The paper presents the effect on drag, lift, undercover flow of Maruti Suzuki Swift car. The simulation of both Swift car with air-dam and without air-dam is being done and the results are analyzed. The modeling of Swift assembly is done using SolidWorks and the simulation is done in Ansys15.0 workbench (Fluent). The validation of results is done using simulation of Ahmed body. The result obtained indicates the effect of air-dam used on Swift car.
Keywords: CFD, Air-dam, Swift, Drag and Lift, Solidworks, ANSYS-Fluent workbench.

1. Introduction

The design of vehicle is governed by many aspects such as aerodynamic behavior, noise-vibration-harness (NVH) performance, stability during cornering, engine cooling etc. Many ofthese parameters are antagonistic in nature i.e. improvement of one may lead to poor performance of the other. Hence it is necessary to optimize the each part of vehicle to meet the requirements. Aerodynamic resistances on a vehicle are dominant at higher speeds and affect the performance of engine as well as transmission components. The force on the vehicle in the direction opposite to moving direction is called drag. The force perpendicular to the drag and normal to the ground is called lift. Higher the drag force higher the engine capacity required. A vehicle achieves higher mileage when the drag on the vehicle is reduced. The drag force and lift force acting on vehicle varies proportional to velocity of vehicle. The undercover drag has a significant effect on total drag of vehicle. In order to determine the effect of aerodynamic forces on different performance parameters of vehicle, number of researches have done experiments and analysis of vehicle. Components like air-dam, spoiler are used to induce negative lift on vehicle while reducing the frontal projected area, sharp edges and avoiding flow separation leads to reduce drag on vehicle.AshitKumar[1]presented a paper studying the effect of height and position of air-dam. The air-dam was attached to passenger cars and its effect was analysed in terms of drag and lift. Also the increase in fuel economy due to use of air-dam was analyzed. Felix Regin[6] carried the CFD simulation in order to determine the effect of ground clearance on various aerodynamic components like air-dam, spoiler etc. the results obtained from CFD simulation was compared with the wind tunnel test results. The results obtained from CFD simulation was 96% similar to that obtained from wind tunnel tests.Robert Lietz [8] represented the behavior of air-dam or chin spoilers made of soft plastics which deflect and deform under aerodynamic loading or when hit against a solid object without breaking in most cases. The conventional air-dam are made of hard plastics. While use of soft plastic for chin spoiler enables the spoiler to deflect according to varying load and hence vary the dynamic pressure force on spoiler. The results obtained reflect great reduction in drag of vehicle.

Howell [4] has also studied the aerodynamic drag of a compact sports utility vehicle (SUV) as measured on road and compared the results with wind tunnel for various configurations of SUV for drag and lift as obtained in coast down testing and wind tunnel.

The aerodynamic resistance force acting on vehicle depends on number of different parameters. Of which the exterior shape of vehicle, smooth edges, use of components like air-dam, spoiler reducing drag and lift are considered of prime importance. Air-dams are basically used to reduce the undercover drag on vehicle, overall drag on vehicle and to induce negative lift. Due to increased negative lift the stability of vehicle at highway speeds, during cornering and on off road drives get increased. Air-dams are also responsible to improve the engine cooling and cooling of transmission components. In this paper air-dam is fitted to Swift car. The dimensions for the Swift car are obtained and are accordingly modeled in Solidworks modeling software. The simulation was carried for Swift with air-dam and without air-dam. For simulation purpose the software used is Ansys15.0 workbench (Fluent). The results are obtained in form of drag and lift. From the results of simulation effect of use of air-dam on drag and lift reduction is analyzed. The validation of results is done using modeling and simulation of Ahmed Body. The dimension of Ahmed body is obtained is modeled in Solidworks modeling software. The slant angle for Ahmed body taken is $25^{0.}$ The simulation is done in Ansys15.0

workbench (Fluent). The results obtained for Ahmed body are compared to theoretical results and is found to be 98% similar. This validates the solver settings which are used for simulation of Swift car with and without air-dam.

2. Methodology

1. Modelling and analysis of Ahmed Bodyto validate the solver settings
2. Modelling of car model without and with air-dam
3. Simulation of both models in "ANSYS Fluent".
4. Analysis of results

2.1 Modeling Of Ahmed Body

Modelling of Ahmed body with rear slant angle 25°was done using SolidWorks 2015.

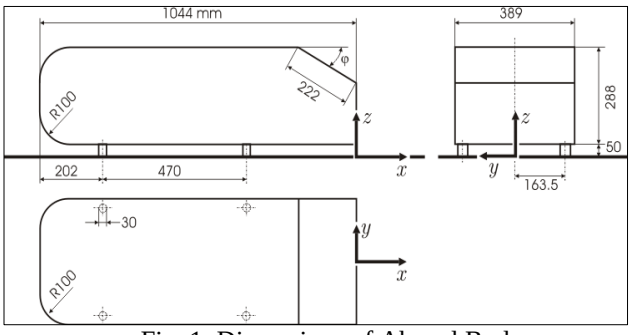

Fig. 1: Dimensions of Ahmed Body

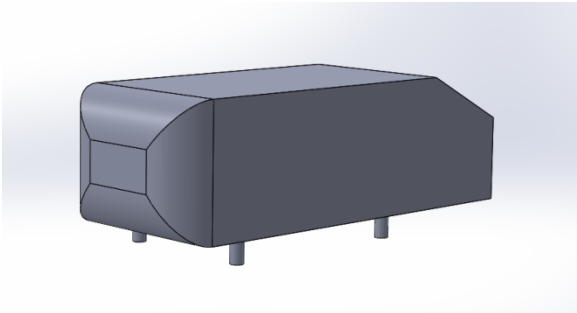

Fig. 2: Model of Ahmed body

2.2 Simulation Of Ahmed Body

Before the simulation of actual car Ahmed body was simulated to validate the solver settings. The Ahmed body was designed with a rear slant angle of 25^{0} and it was simulated with an air speed of 40 m/s.

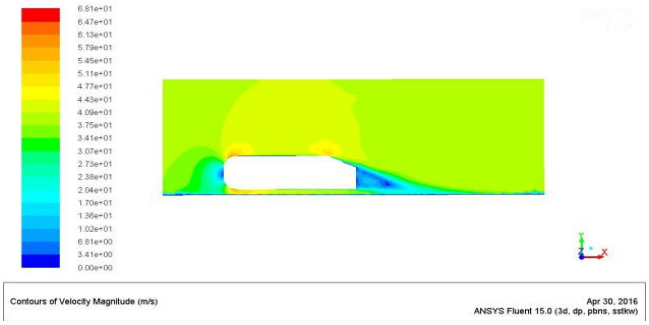

Fig. 3: Velocity contours of Ahmed Body

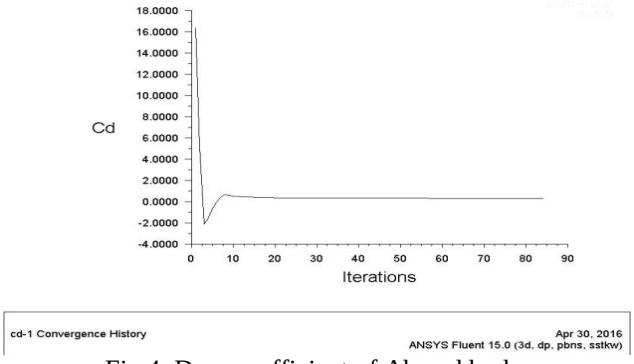

Fig 4: Drag coefficient of Ahmed body

The drag coefficient of the Ahmed body was obtained as 0.324 which is near to the required value. Hence the solver settings are valid.

TABLE1:VALIDATIONOFRESULTFORAHMEDBODY[2]

Slant Angle	Experimental result	Open FOAM	CFD++
25º	0.285	0.292	0.314
30º	0.379	0.315	0.291
35º	0.263	0.317	0.301

2.3 Modelling Of Car

The car dimensions blue prints were obtained from the manufacturer website and it was traced in SolidWorks. Later it was modified to obtain a solid model of the car.

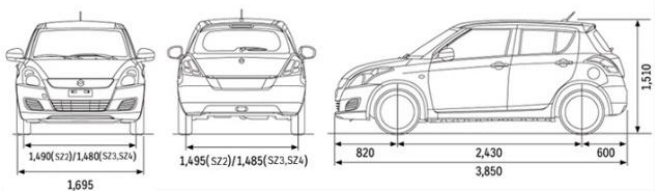

Fig. 5: Car dimensions

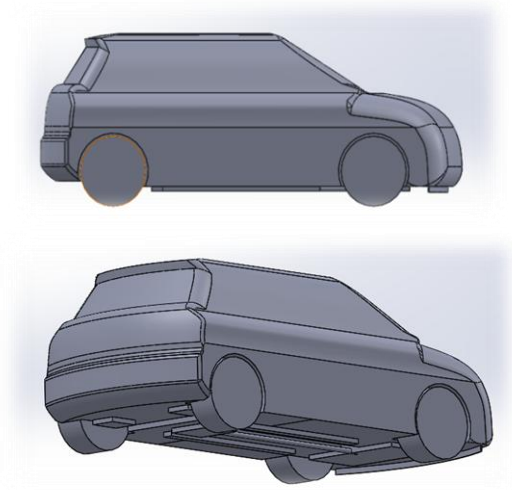

Fig. 6: Solid model of the car

The major focus was on reducing the drag caused by the underbody. Hence underbody and the air-dam for reduction of the drag was also modelled.

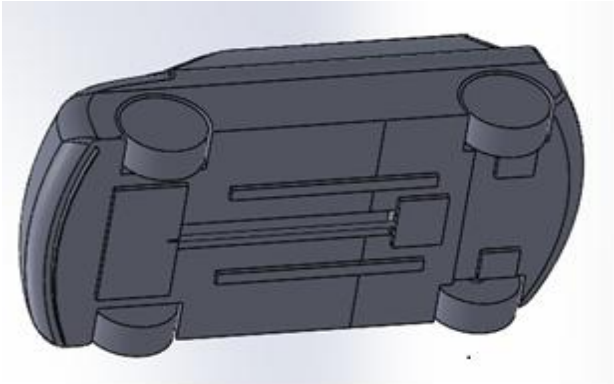

Fig 6: Underside of the car model

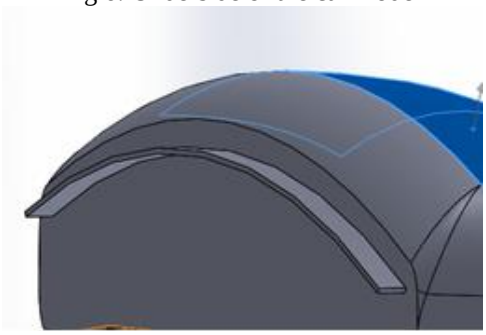

Fig. 7: Air-dam attached to the front bumper

2.4 Analysis Of Car Model

The car model was imported to ANSYS Fluent 15 and an enclosure was formed around it as shown below. This would be treated as wind tunnel during the analysis.

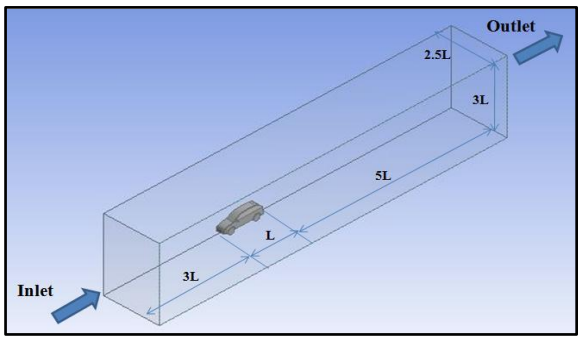

Fig. 7: Wind tunnel setup in ANSYS Fluent

The volume was meshed with tetrahedron mesh and 20% inflation. The mesh was later converted to Polyhedra for reducing computing time.

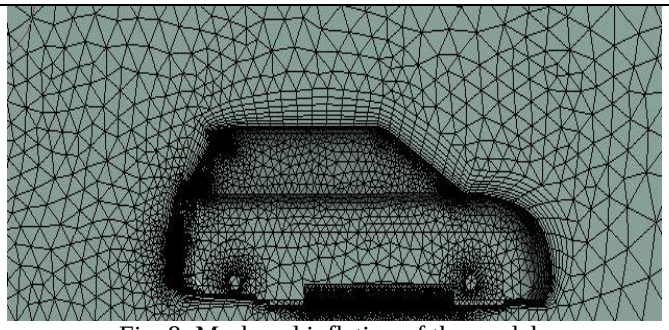

Fig. 8: Mesh and inflation of the model

3. RESULTS AND DISCUSSION

3.1 Car Model Without Air-Dam

The drag of the model without air-dam was obtained as0.344. The convergence is as shown below.

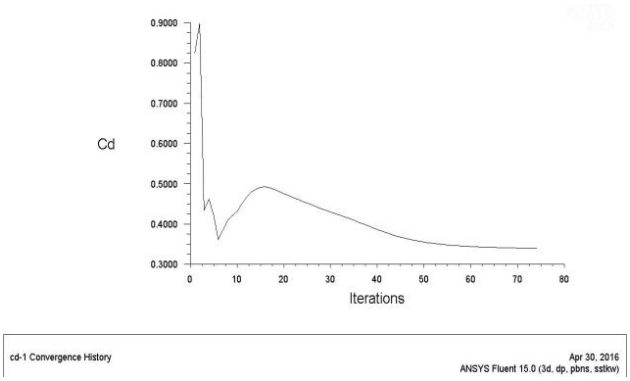

Fig. 9: Drag coefficient of car without air-dam

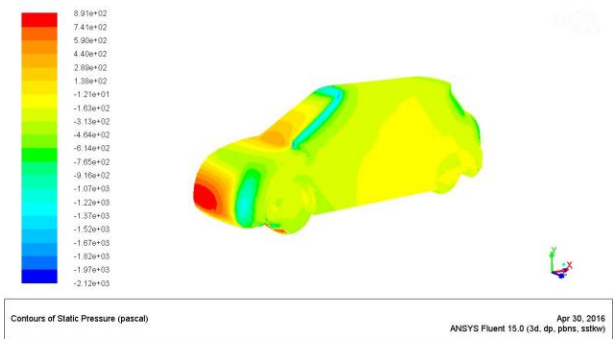

Fig. 10 : Pressure contours of car without airdam

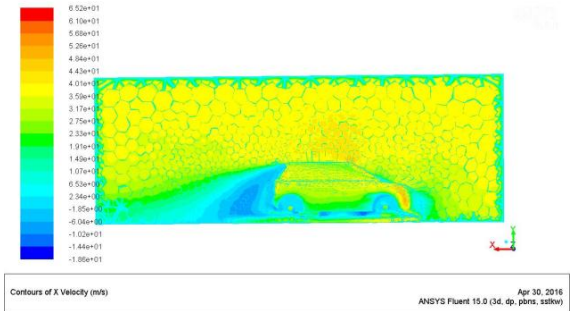

Fig. 11. Velocity contours of car without air-dam

3.2 Car Model With Air-Dam

The drag coefficient of car with air-dam attached was obtained as 0.324. The convergence was obtained as shown below.

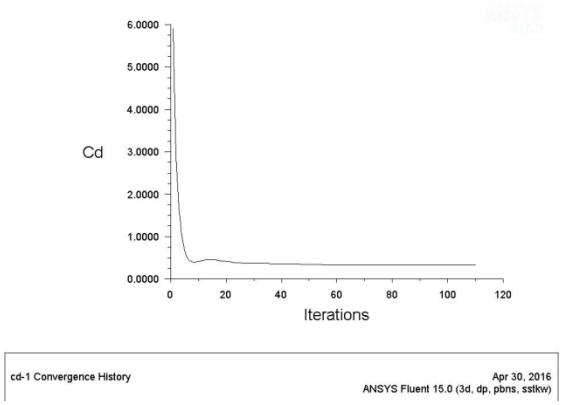

Fig. 11: Drag coefficient of car with air-dam

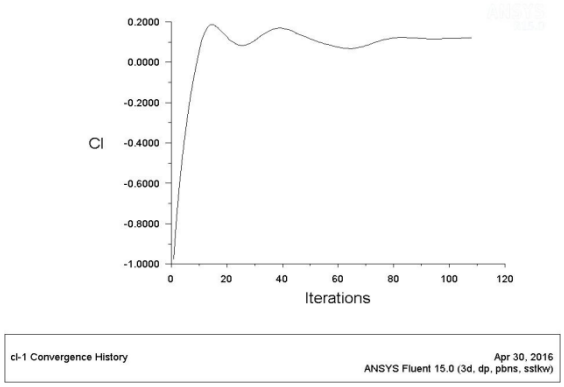

Fig. 12: Lift coefficient of car with air-dam

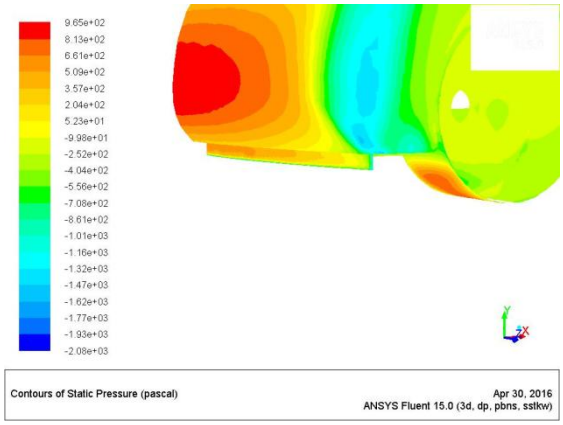

Fig. 13: Pressure distribution at air-dam

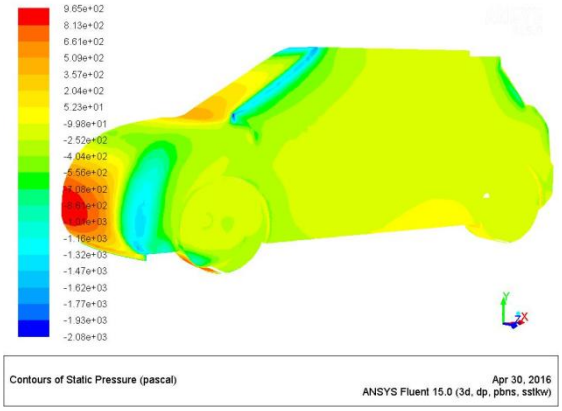

Fig. 14: Overall pressure distribution of car with air-dam

4. Conclusion

The drag coefficient of the car decreases to 0.324 with air-dam attached to the car as compared to the drag coefficient of 0.344 for the car without air-dam.

This shows that the drag caused by the underbody of a passenger car can be reduced by attachment of a frontal air-dam. This will improve the fuel economy of the car while it is driven on the highway.

5. References

[1] A. Kumar, F. R. A, R. Devireddy, and R. K. Cheni, “Passenger Car Front Air - Dam Design Based on Aerodynamic and Fuel Economy Simulations,” pp. 1–9, 2016.

[2] A. Singh, S. Kumar, and K. Nikam, “High Performance CFD Computations for Ground Vehicle Aerodynamics Virtual Wind Tunnel Set up,” *SAE Tech. Pap.*, 2011.

[3] J. Howell, M. Passmore, and S. Tuplin, “Aerodynamic Drag Reduction on a Simple Car-Like Shape with Rear Upper Body Taper,” *SAE Int. J. Passeng. Cars - Mech. Syst.*, vol. 6, no. 1, pp. 2013–01–0462, 2013.

[4] J. Howell, C. Sherwin, and G. Le Good, “Aerodynamic Drag of a Compact SUV as Measured On-Road and in the Wind Tunnel,” *SAE Pap.*, no. 724, pp. 2002–01–0529, 2010.

[5] G. Larose, L. Belluz, I. Whittal, M. Belzile, R. Klomp, and A. Schmitt, “Evaluation of the Aerodynamics of Drag Reduction Technologies for Light-duty Vehicles: a Comprehensive Wind Tunnel Study,” *SAE Int. J. Passeng. Cars - Mech. Syst.*, vol. 9, no. 2, pp. 2016–01–1613, 2016.

[6] A. Kumar, A. Singh, and F. R. A, “Study on Effect of Ground Clearance on Performance of Aerodynamic Drag Reduction Devices for Passenger Vehicle Using CFD Simulations,” 2016.

[7] C. Lothode, M. Durand, a Leroyer, M. Visonneau, Y. Roux, L. Dorez, and R. Yacht, “Fluid Structure Interaction Analysis of an,” pp. 1–11, 2013.

[8] S. Patil, R. Lietz, S. Woodiga, H. Ahn, L. Larson, R. Gin, M. Elmore, and A. Simpson, “Fluid Structure Interaction Simulations Applied to Automotive Aerodynamics,” 2016.

[9] R. Schoon and F. P. Pan, “Practical Devices for Heavy Truck Aerodynamic Drag Reduction,” no. 724, 2016.

[10] K. R. Cooper, T. Bertenyi, G. Dutil, and J. Syms, “The Aerodynamic Performance of Automotive Underbody Diffusers,” *Sae*, no. 724, 1998.

[11] J. Marklund, L. Lofdahl, H. Danielsson, and G. Olsson, “Performance of an Automotive Under-Body Diffuser Applied to a Sedan and a Wagon Vehicle,” *SAE Int. J. Passeng. Cars - Mech. Syst.*, vol. 6, no. 1, pp. 293–307, 2013.

[12] R. Schoon and F. P. Pan, “Practical Devices for Heavy Truck Aerodynamic Drag Reduction,” no. 724, 2016.